YIC

GPS & BDS Receiver Module

YIC91009EBGB

Datasheet

www.yic.com.tw

1. Product Information

1.1 Product Description

YIC91009EBGB-U8 is a compact, high performance and low power consumption, standalone multiple GNSS module. The module can simultaneously acquire and track multiple satellite constellations that include GPS, GLONASS, BEIDOU, GALILEO, QZSS and SBAS. It features low power and small form factor.

YIC91009EBGB-U8 is suitable for the following applications:

- Automotive navigation
- Personal positioning
- Fleet management
- Mobile phone navigation
- Marine navigation

1.2 Product Features

- High performance and low power consumption GNSS Chipset
- Very high sensitivity
- Extremely fast TTFF (Time To First Fix) at low signal level
- Built-in LNA
- Compact size suitable for space-sensitive application
- One size component, easy to mount on another PCB board
- Support NMEA 0183 and binary protocol

1.3 Product Specifications

GNSS Performance	
Chipset	u-blox M8 (UBX-M8030)
Frequency	GPS/QZSS L1 C/A BeiDou B1 SBAS L1 C/A:WAAS, EGNOS, MSAS
Code	C/A Code
Protocol	NMEA 0183 Default:GGA,GSA,GSV,RMC Support:VTG,GLL,TXT binary and NMEA Command
Available Baud Rate	9,600 bps
Channels	72
Sensitivity	Tracking:-167dBm Reacquisition:-160dBm ColdStart:-148dBm HotStart:-156dBm
Cold Start	26 seconds, average
Aided Start	2 seconds, average
Hot Start	1 second, average
Accuracy	HorizontalPosition:Autonomous<2.5m average, SBAS < 2.0m average Velocity: 0.1 m/s Timepulse signal: RMS 30 ns
Maximum Altitude	50,000 meter
Maximum Velocity	500 m/s(1000 knots)
Dynamics	≦ 4G
Update Rate	Single GNSS up to 18Hz Concurrent GNSS up to 10Hz
A-GPS	AssistNow on-line
Physical Characteristic	
Type	18 pin stamp holes
Dimensions	10.1mm * 9.7 mm * 2.5mm ±0.2mm

1.4 DC Electrical characteristics

Parameter	Symbol	Conditions	Min.	Typ.	Max.	Units
Input Voltage	VCC		2.8	3.3	3.6	V
Input Backup Battery Voltage	V_BCKP		1.4		3.6	V
Supply Current	Iss	VCC = 3.3V,w/o active antenna,				
		Peak			100	mA
		Acquisition		29		mA
		Tracking		28		mA
		Standby		365		uA
Backup Battery Current	Ibat			7		uA
High Level Input Voltage	VIH		2.0			V
Low Level Input Voltage	VIL				0.8	V
High Level Input Current	IIH	no pull-up or down	-1		1	uA
Low Level Input Current	IIL	no pull-up or down	-1		1	uA
High Level Output Voltage	VOH		2.4			V
Low Level Output Voltage	VOL				0.4	V

Note 1: This happens when downloading AGPS data to Module.

Note 2: Measured when position fix (1Hz) is available, input voltage is 3.3V and the function of self-generated ephemeris prediction is inactive.

Temperature characteristics

Parameter	Symbol	Min.	Typ.	Max.	Units
Operating Temperature	Topr	-40	25	85	℃
Storage Temperature	Tstg	-40	25	85	℃

2. Block Diagram

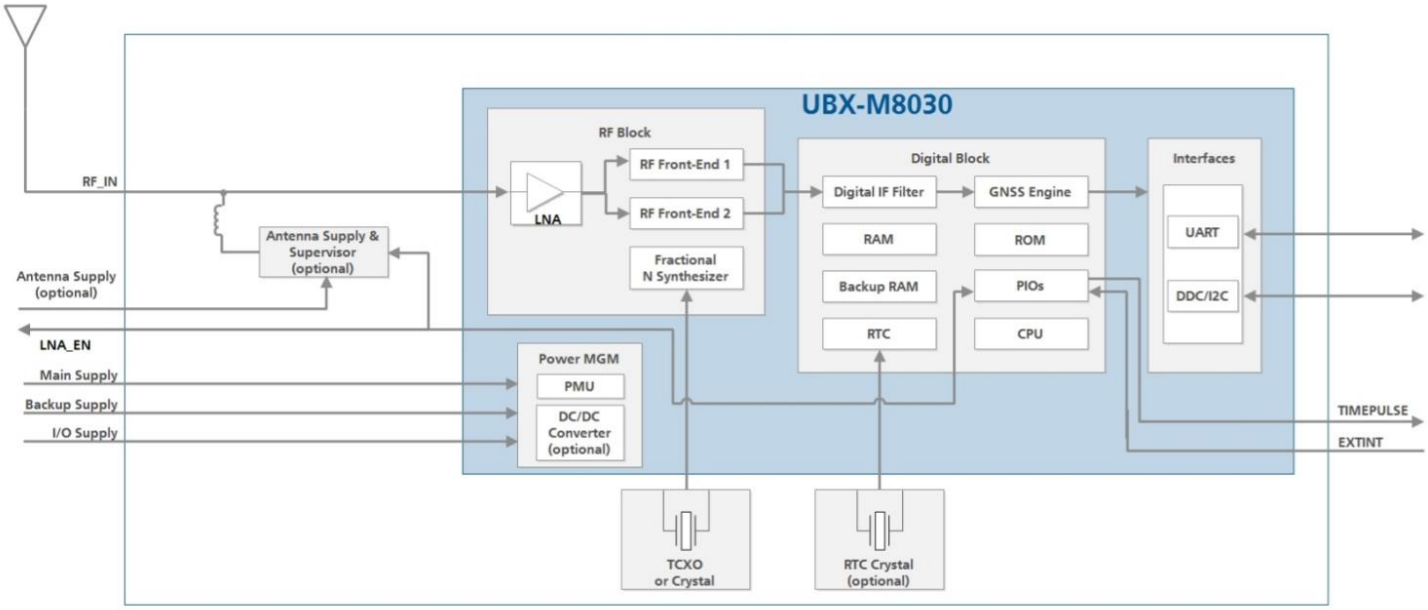

3. Module Pin Assignment

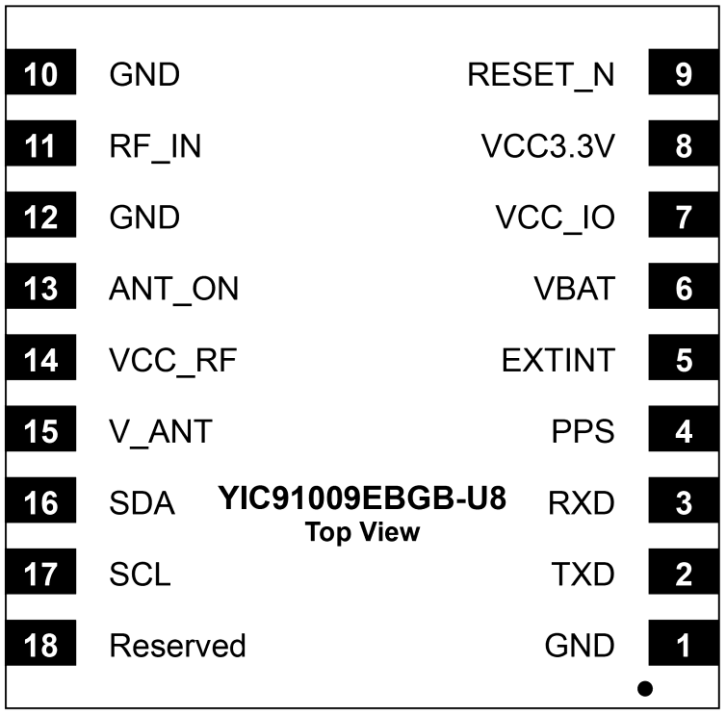

Pin NO.	Pin Name	I/O	Remark
1.	GND	G	Ground
2.	TXD	O	UART Serial Data Output
3.	RXD	I	UART Serial Data Input
4.	PPS	P	Time Pulse(1PPS),Leave Open in not used
5.	EXTINT	I/O	External Interrupt Pin
6.	VBAT	I	RTC Battery Input
7.	VCC_IO		IO Supply Voltage
8.	VCC_3.3V	PWR	Main power supply to the engine board
9.	RESET_N	I	Module Reset (Active Low)
10.	GND	G	Ground
11.	RF_IN	RF	GNSS antenna input
12.	GND	G	Ground
13.	ANT_ON		Antenna control
14.	VCC_RF	P	Linear regulator power output, 3.3V (Do not use this as power source of backup battery)
15.	V_ANT		Active Antenna Supply Voltage
16.	SDA	O	DDC Data
17.	SCL	I	DDC Clock
18.	Reserved	I/O	Reserved

4. Dimensions

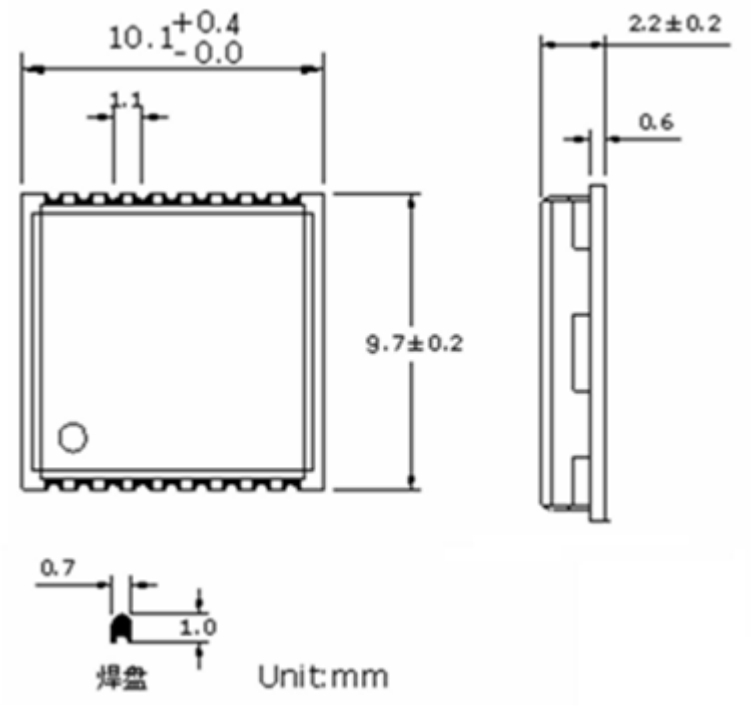

5. Recommended Footprint

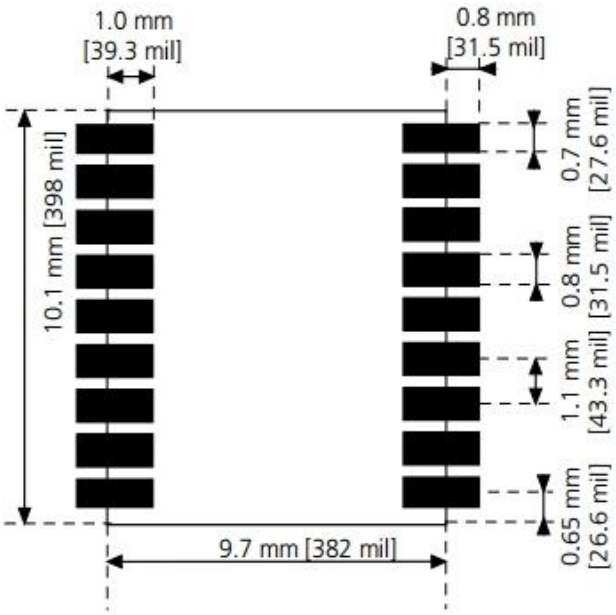

6. Application Circuit

6.1 Application Circuit for YIC91009EBGB-U8 Series

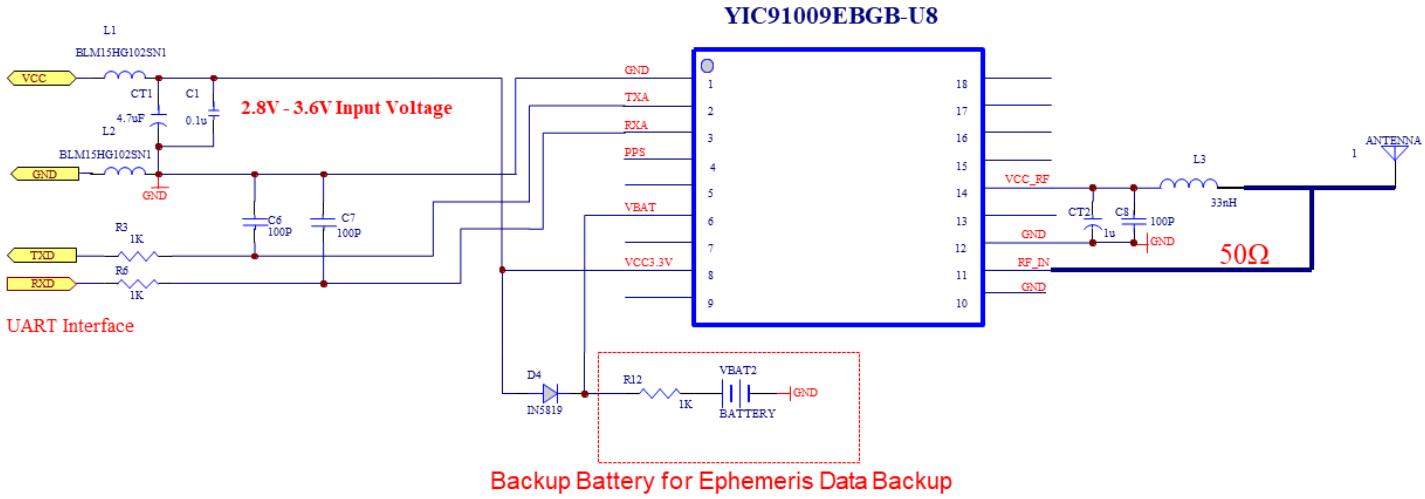

7. Reflow Profile

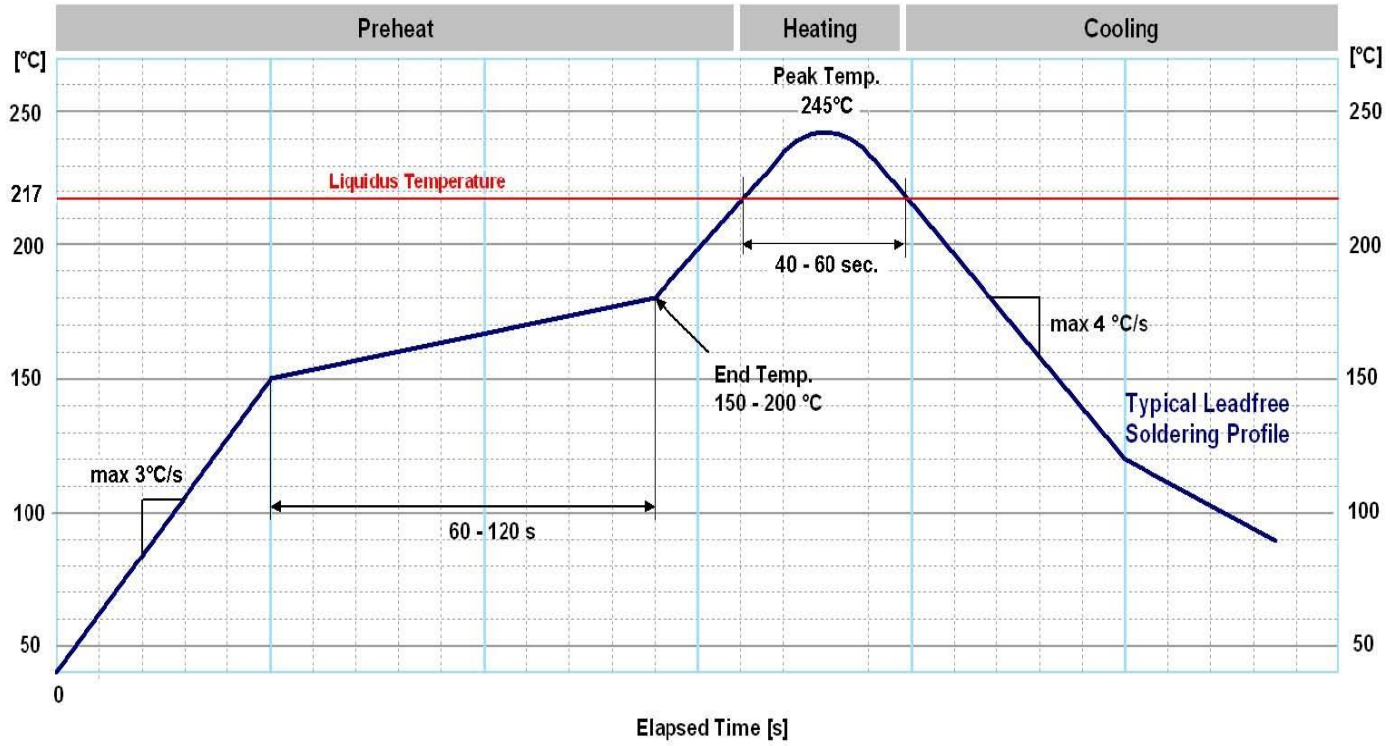

8. Tape & Reel (unit : mm)

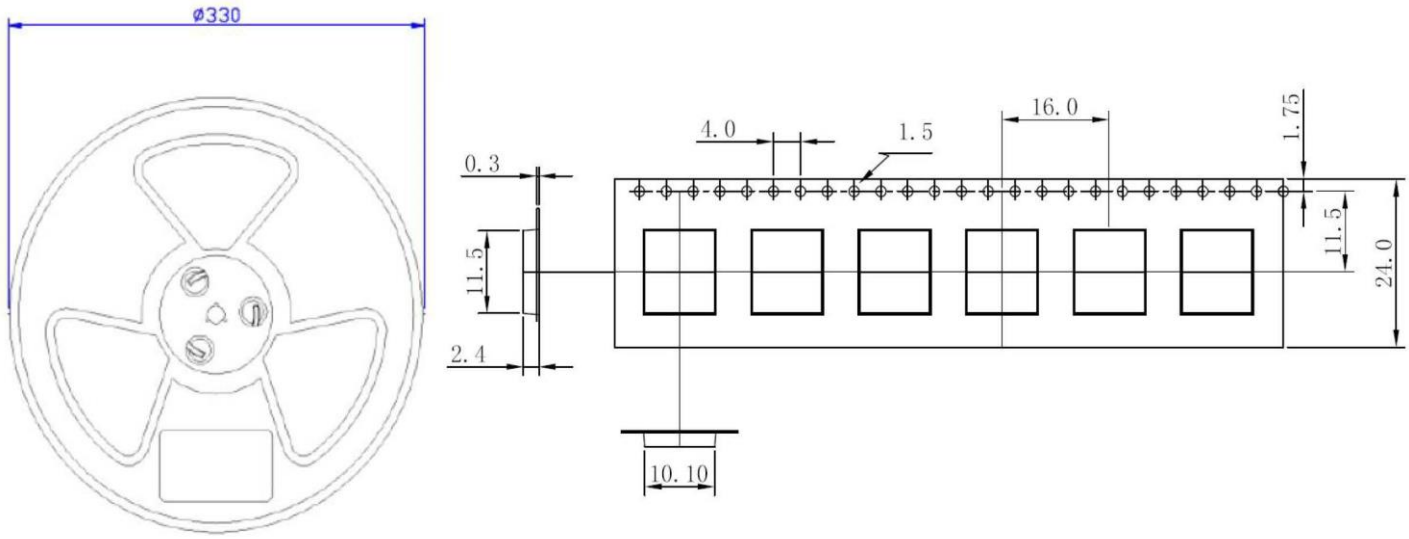

9. Software Interface

NMEA output message

Table 9.1 NMEA output message

NMEA	Description
GGA	Global positioning system fixed data
GLL	Geographic position - latitude/longitude
GSA	GNSS DOP and active satellites
GSV	GNSS satellites in view
RMC	Recommended minimum specific GNSS data
VTG	Course over ground and ground speed

GGA--- Global Positioning System Fixed Data

Table 9.2 contains the values for the following example:

$GPGGA,060406.000,2503.7148,N,12138.7451,E,2,17,0.71,116.7,M,15.3,M,0000,0000*6D

Table 9.2 GGA Data Format

Name	Example	Units	Description
Message ID	$GPGGA		GGA protocol header
UTC Time	060406.000		hhmmss.sss
Latitude	2503.7148		ddmm.mmmm
N/S indicator	N		N=north or S=south
Longitude	12138.7451		dddmm.mmmm
E/W Indicator	E		E=east or W=west
Position Fix Indicator	2		See Table 9.3
Satellites Used	17		Range 0 to 33
HDOP	0.71		Horizontal Dilution of Precision
MSL Altitude	116.7	mters	
Units	M	mters	
Geoid Separation	15.3	mters	
Units	M	mters	
Age of Diff. Corr.	0000	second	Null fields when DGPS is not used
Diff. Ref. Station ID	0000		
Checksum	*6D		
<CR> <LF>			End of message termination

Table 9.3 Position Fix Indicators

Value	Description
0	Fix not available or invalid
1	GPS SPS Mode, fix valid
2	Differential GPS, SPS Mode, fix valid
3-5	Not supported
6	Dead Reckoning Mode, fix valid

GLL--- Geographic Position – Latitude/Longitude

Table 9.4 contains the values for the following example:
$GNGLL,2503.7148,N,12138.7451,E,060406.000,A,D*46

Table 9.4 GLL Data Format

Name	Example	Units	Description
Message ID	$GNGLL		GLL protocol header (GPGLL or GNGLL; GP indicates the device receives GPS satellites signal only and GN indicates the position is calculated with BEIDOU satellite signal)
Latitude	2503.7148		ddmm.mmmm
N/S indicator	N		N=north or S=south
Longitude	12138.7451		dddmm.mmmm
E/W indicator	E		E=east or W=west
UTC Time	060406.000		hhmmss.sss
Status	A		A=data valid or V=data not valid
Mode	D		A=autonomous, D=DGPS, E=DR, N=Data not valid, R=Coarse Position, S=Simulator
Checksum	*46		
<CR> <LF>			End of message termination

GSA---GNSS DOP and Active Satellites

Table 9.5 contains the values for the following example:

$GNGSA,A,3,22,21,18,12,24,25,14,15,193,,,,1.18,0.71,0.95*2C

$GNGSA,A,3,205,207,210,202,201,203,209,208,,,,,1.18,0.71,0.95*1C

Table 9.5 GSA Data Format

Name	Example	Units	Description
Message ID	$GNGSA		GSA protocol header (GNGSA or GPGSA; GP indicates the device receives GPS satellites signal only and GN indicates the position is calculated with BEIDOU satellite signal).First row of GSA message contains GPS & QZSS satellites and second row of GSA message contains BEIDOU satellites.
Mode 1	A		See Table 9.6
Mode 2	3		See Table 9.7
ID of satellite used	22		Sv on Channel 1
ID of satellite used	21		Sv on Channel 2
….			….
ID of satellite used			Sv on Channel 12
PDOP	1.18		Position Dilution of Precision
HDOP	0.71		Horizontal Dilution of Precision
VDOP	0.95		Vertical Dilution of Precision
Checksum	*2C		
<CR> <LF>			End of message termination

Table 9.6 Mode 1

Value	Description
M	Manual- forced to operate in 2D or 3D mode
A	Automatic-allowed to automatically switch 2D/3D

Table 9.7 Mode 2

Value	Description
1	Fix not available
2	2D
3	3D

GSV---GNSS Satellites in View

Table 9.8 contains the values for the following example:

$GPGSV,6,1,21,18,78,169,36,209,72,273,36,22,63,309,38,207,63,328,38*7B

$GPGSV,6,2,21,203,58,205,39,25,56,138,39,201,55,141,34,206,50,168,*45

$GPGSV,6,3,21,210,49,282,34,12,48,076,39,204,39,118,,14,38,322,37*77

$GPGSV,6,4,21,193,37,180,34,202,36,246,29,24,23,041,34,31,21,244,*71

$GPGSV,6,5,21,21,17,198,33,205,16,258,28,15,12,092,33,208,09,169,30*7B

$GPGSV,6,6,21,51,,,*7E

Table 9.8 GSV Data Format

Name	Example	Units	Description
Message ID	$GPGSV		GSV protocol header
Total number of messages1	6		Range 1 to 6
Message number1	1		Range 1 to 6
Satellites in view	21		
Satellite ID	18		Channel 1 (Range 01 to 237), GPS Satellites ID : 01~32,SBAS Satellites ID : 33~64, QZSS Satellites ID:193~196, &BEIDOU Satellites ID : 201~214
Elevation	78	degrees	Channel 1 (Range 00 to 90)
Azimuth	169	degrees	Channel 1 (Range 000 to 359)
SNR (C/No)	36	dB-Hz	Channel 1 (Range 00 to 99, null when not tracking)
….	….	….	….
Satellite ID	207		Channel 4 (Range 01 to 237) , GPS Satellites ID : 01~32,SBAS Satellites ID : 33~64, QZSS Satellites ID:193~196, &BEIDOU Satellites ID : 201~214
Elevation	63	degrees	Channel 4 (Range 00 to 90)
Azimuth	328	degrees	Channel 4 (Range 000 to 359)
SNR (C/No)	38	dB-Hz	Channel 4 (Range 00 to 99, null when not tracking)
Checksum	*7B		
<CR> <LF>			End of message termination

Depending on the number of satellites tracked multiple messages of GSV data may be required.

RMC---Recommended Minimum Specific GNSS Data

Table 9.9 contains the values for the following example:

$GNRMC,060406.000,A,2503.7148,N,12138.7451,E,0.01,0.00,180313,,,D*78

Table 9.9 RMC Data Format

Name	Example	Units	Description
Message ID	$GNRMC		RMC protocol header (GNRMC or GPRMC; GP indicates the device receives GPS satellites signal only and GN indicates the position is calculated with BEIDOU satellite signal)
UTC Time	060406.000		hhmmss.sss
Status	A		A=data valid or V=data not valid
Latitude	2503.7148		ddmm.mmmm
N/S Indicator	N		N=north or S=south
Longitude	12138.7451		dddmm.mmmm
E/W Indicator	E		E=east or W=west
Speed over ground	0.01	knots	True
Course over ground	0.00	degrees	
Date	180313		ddmmyy
Magnetic variation		degrees	
Variation sense			E=east or W=west (Not shown)
Mode	D		A=autonomous, D=DGPS, E=DR, N=Data not valid,R=Coarse Position, S=Simulator
Checksum	*78		
<CR> <LF>			End of message termination

VTG---Course Over Ground and Ground Speed

Table 9.10 contains the values for the following example:
$GPVTG,0.00,T,,M,0.01,N,0.02,K,D*3B

Table 9.10 VTG Data Format

Name	Example	Units	Description
Message ID	$GPVTG		VTG protocol header
Course over ground	0.00	degrees	Measured heading
Reference	T		True
Course over ground		degrees	Measured heading
Reference	M		Magnetic
Speed over ground	0.01	knots	Measured speed
Units	N		Knots
Speed over ground	0.02	km/hr	Measured speed
Units	K		Kilometer per hour
Mode	D		A=autonomous, D=DGPS, E=DR, N=Data not valid,R=Coarse Position, S=Simulator
Checksum	*3B		
<CR> <LF>			End of message termination