YIC

GPS & BDS Antenna Module

YIC93030PGMFUGB-U8

Datasheet

www.yic.com.tw

1. Product Information

1.1 Product Description

YIC93030PGMFUGB-U8 is a USB interface, compact, high performance, and low power consumption flash base GPS/GNSS Antenna Module.

It uses the chipset which can track up to 72 channels at a time and perform fast TTFF in weak signal environments.

YIC93030PGMFUGB-U8 is suitable for the following applications

- Automotive navigation
- Personal positioning
- Fleet management
- Mobile phone navigation
- Marine navigation

1.2 Product Features

- 1pps output
- Data logging
- High performance and low power consumption GPS Chipset
- Very high sensitivity
- Extremely fast TTFF (Time To First Fix) at low signal level
- Built-in SPI Flash
- Built-in LNA
- Compact size suitable for space-sensitive application
- Support NMEA 0183 and ublox binary protocol
- Green LED Indicating Light for GPS Status
- On-line and off-line AGPS

1.3 Product Specifications

GPS Receiver		
Chip	UBX-M8030-KT	
Frequency	GPS/QZSS L1 C/A BeiDou B1 SBAS L1 C/A:WAAS, EGNOS, MSAS	
Channels	Support 72 channels	
Update rate	1Hz default, up to 10Hz	
Sensitivity	Tracking	-163dBm, up to -165dBm (with external LNA)
	Cold Start	-143.5dBm, up to -148dBm (with external LNA)
Acquisition Time	Hot start (Open Sky)	< 1s (typical)
	Hot start (Indoor)	< 30s
	Cold Start (Open Sky)	32s (typical) without AGPS
		< 15s (typical) with AGPS (hybrid ephemeris prediction)
Position Accuracy	Autonomous	3m (2D RMS)
	SBAS	2.5m (depends on accuracy of correction data)
Max. Altitude	50,000m Max	
Max. Velocity	< 515 m/s	
Protocol Support	NMEA 0183	9600 bps, 8 data bits, no parity, 1 stop bits (default) 1Hz: GGA, GLL, GSA, GSV, RMC, VTG
Physical Characteristic		
Dimensions	30.0mm * 30.0 mm * 8.4mm ±0.2mm	

1.4 DC Electrical characteristics

Parameter	Symbol	Conditions	Min.	Typ.	Max.	Units
Input Voltage	VCC		4.75	5.0	5.25	V
Input Backup Battery Voltage	V_BCKP		2.8		3.6	V
Supply Current	Iss	VCC = 5.0V Peak Acquisition Tracking Standby		 36 31(2) 550	 150(1)	 mA mA mA uA
Backup Battery Current	Ibat	VCC = 0V		20		uA
High Level Input Voltage	VIH		0.7xVcc			V
Low Level Input Voltage	VIL				0.3xVcc	V
High Level Input Current	IIH	no pull-up or down	-1		1	uA
Low Level Input Current	IIL	no pull-up or down	-1		1	uA
High Level Output Voltage	VOH		0.8xVcc			V
Low Level Output Voltage	VOL				0.2xVcc	V
High Level Output Current	IOH			3		mA
Low Level Output Current	IOL			3		mA

Note 1: This happens when downloading AGPS data to Module.

Note 2: Measured when position fix (1Hz) is available, input voltage is 5V and the function of self-generated ephemeris prediction is inactive.

1.5 Temperature characteristics

Parameter	Symbol	Min.	Typ.	Max.	Units
Operating Temperature	Topr	-40	25	85	℃
Storage Temperature	Tstg	-40	25	85	℃

2. Pin Assignments & Dimensions

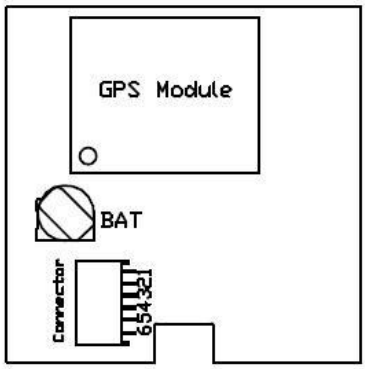

Pin NO.	Pin Name	I/O	Remark
1.	VCC	I	Module Power Supply
2.	AGND	G	Ground
3.	GND	G	Ground
4.	RXD	I	USB Serial Data Input
5.	TXD	O	USB Serial Data Output
6.	PPS	O	Time Pulse(1PPS)
LED	GPS Status	O	LED On : Searching for GPS Signals LED Blinking : Position fixed

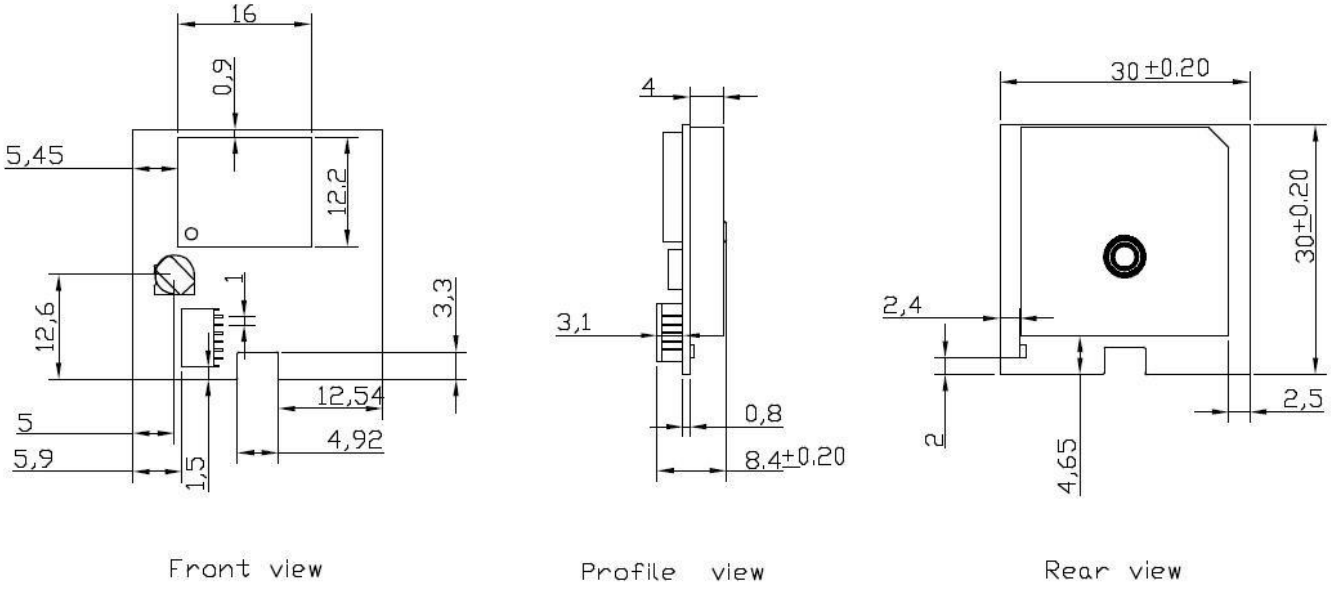

2.1 Additional ordering options

(Different cables & connectors can be specified according to requirements)

2.1.1 Modules include Cable & Connector

Y	I	C	9	3	0	3	0	P	G	M	F	U	G	B	-	U	8	-	U

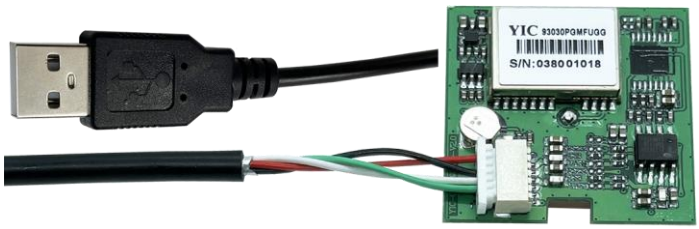

Code	Connector 1 (Module)	Cable Length	Connector 2 (Host)
U	JST	1500 mm	USB

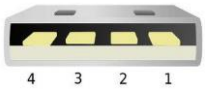

I/O Interface	Voltage level
USB Interface	USB level

Pin	Pin define	Level
1	Vcc	4.75 - 5.5V DC
2	USB_DM	USB Data (D-)
3	USB_DP	USB Data (D+)
4	GND	Ground

3. Application Circuit ：(Example)

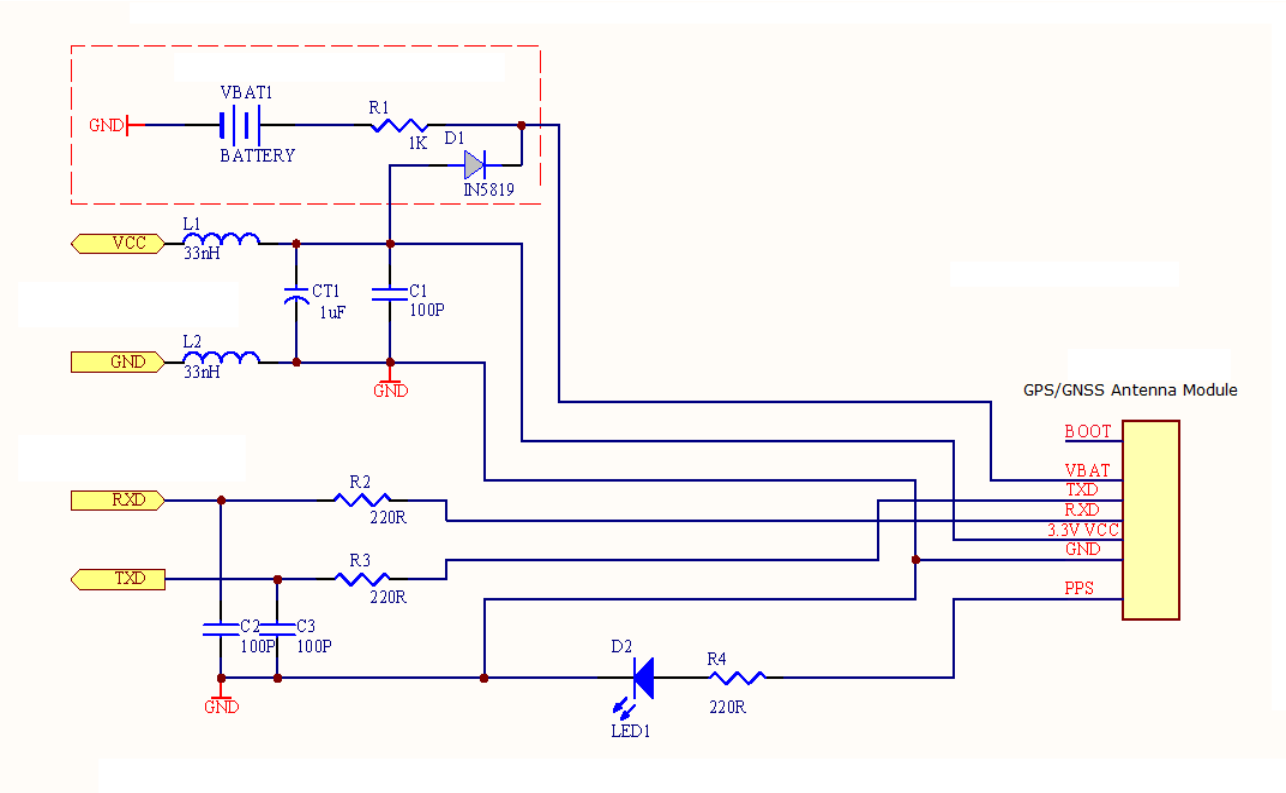

4. Software Protocol

NMEA output message

Table 4.1 NMEA output message

NMEA	Description
GGA	Global positioning system fixed data
GLL	Geographic position - latitude/longitude
GSA	GNSS DOP and active satellites
GSV	GNSS satellites in view
RMC	Recommended minimum specific GNSS data
VTG	Course over ground and ground speed

GGA--- Global Positioning System Fixed Data

Table 4.2 contains the values for the following example:

$GPGGA,060406.000,2503.7148,N,12138.7451,E,2,17,0.71,116.7,M,15.3,M,0000,0000*6D

Table4. 2 GGA Data Format

Name	Example	Units	Description
Message ID	$GPGGA		GGA protocol header
UTC Time	060406.000		hhmmss.sss
Latitude	2503.7148		ddmm.mmmm
N/S indicator	N		N=north or S=south
Longitude	12138.7451		dddmm.mmmm
E/W Indicator	E		E=east or W=west
Position Fix Indicator	2		See Table 4.3
Satellites Used	17		Range 0 to 33
HDOP	0.71		Horizontal Dilution of Precision
MSL Altitude	116.7	mters	
Units	M	mters	
Geoid Separation	15.3	mters	
Units	M	mters	
Age of Diff. Corr.	0000	second	Null fields when DGPS is not used
Diff. Ref. Station ID	0000		
Checksum	*6D		
<CR> <LF>			End of message termination

Table4.3 Position Fix Indicators

Value	Description
0	Fix not available or invalid
1	GPS SPS Mode, fix valid
2	Differential GPS, SPS Mode, fix valid
3-5	Not supported
6	Dead Reckoning Mode, fix valid

GLL--- Geographic Position – Latitude/Longitude

Table4.4 contains the values for the following example:

$GNGLL,2503.7148,N,12138.7451,E,060406.000,A,D*46

Table3.4 GLL Data Format

Name	Example	Units	Description
Message ID	$GNGLL		GLL protocol header (GPGLL or GNGLL; GP indicates the device receives GPS satellites signal only and GN indicates the position is calculated with BEIDOU satellite signal)
Latitude	2503.7148		ddmm.mmmm
N/S indicator	N		N=north or S=south
Longitude	12138.7451		dddmm.mmmm
E/W indicator	E		E=east or W=west
UTC Time	060406.000		hhmmss.sss
Status	A		A=data valid or V=data not valid
Mode	D		A=autonomous, D=DGPS, E=DR, N=Data not valid, R=Coarse Position, S=Simulator
Checksum	*46		
<CR> <LF>			End of message termination

GSA---GNSS DOP and Active Satellites

Table 4.5 contains the values for the following example:

$GNGSA,A,3,22,21,18,12,24,25,14,15,193,,,,1.18,0.71,0.95*2C

$GNGSA,A,3,205,207,210,202,201,203,209,208,,,,,1.18,0.71,0.95*1C

Table3. 5 GSA Data Format

Name	Example	Units	Description
Message ID	$GNGSA		GSA protocol header (GNGSA or GPGSA; GP indicates the device receives GPS satellites signal only and GN indicates the position is calculated with BEIDOU satellite signal).First row of GSA message contains GPS & QZSS satellites and second row of GSA message contains BEIDOU satellites.
Mode 1	A		See Table 4.6
Mode 2	3		See Table 4.7
ID of satellite used	22		Sv on Channel 1
ID of satellite used	21		Sv on Channel 2
….			….
ID of satellite used			Sv on Channel 12
PDOP	1.18		Position Dilution of Precision
HDOP	0.71		Horizontal Dilution of Precision
VDOP	0.95		Vertical Dilution of Precision
Checksum	*2C		
<CR> <LF>			End of message termination

Table 4.6 Mode 1

Value	Description
M	Manual- forced to operate in 2D or 3D mode
A	Automatic-allowed to automatically switch 2D/3D

Table 4.7 Mode 2

Value	Description
1	Fix not available
2	2D
3	3D

GSV---GNSS Satellites in View

Table 4.8 contains the values for the following example:

$GPGSV,6,1,21,18,78,169,36,209,72,273,36,22,63,309,38,207,63,328,38*7B

$GPGSV,6,2,21,203,58,205,39,25,56,138,39,201,55,141,34,206,50,168,*45

$GPGSV,6,3,21,210,49,282,34,12,48,076,39,204,39,118,,14,38,322,37*77

$GPGSV,6,4,21,193,37,180,34,202,36,246,29,24,23,041,34,31,21,244,*71

$GPGSV,6,5,21,21,17,198,33,205,16,258,28,15,12,092,33,208,09,169,30*7B

$GPGSV,6,6,21,51,,,*7E

Table 4.8 GSV Data Format

Name	Example	Units	Description
Message ID	$GPGSV		GSV protocol header
Total number of messages1	6		Range 1 to 6
Message number1	1		Range 1 to 6
Satellites in view	21		
Satellite ID	18		Channel 1 (Range 01 to 237), GPS Satellites ID : 01~32,SBAS Satellites ID : 33~64, QZSS Satellites ID:193~196, &BEIDOU Satellites ID : 201~214
Elevation	78	degrees	Channel 1 (Range 00 to 90)
Azimuth	169	degrees	Channel 1 (Range 000 to 359)
SNR (C/No)	36	dB-Hz	Channel 1 (Range 00 to 99, null when not tracking)
Satellite ID	207		Channel 4 (Range 01 to 237) , GPS Satellites ID : 01~32,SBAS Satellites ID : 33~64, QZSS Satellites ID:193~196, &BEIDOU Satellites ID : 201~214
Elevation	63	degrees	Channel 4 (Range 00 to 90)
Azimuth	328	degrees	Channel 4 (Range 000 to 359)
SNR (C/No)	38	dB-Hz	Channel 4 (Range 00 to 99, null when not tracking)
Checksum	*7B		
<CR> <LF>			End of message termination

Depending on the number of satellites tracked multiple messages of GSV data may be required.

RMC---Recommended Minimum Specific GNSS Data

Table 4.9 contains the values for the following example:

$GNRMC,060406.000,A,2503.7148,N,12138.7451,E,0.01,0.00,180313,,,D*78

Table 4.9 RMC Data Format

Name	Example	Units	Description
Message ID	$GNRMC		RMC protocol header (GNRMC or GPRMC; GP indicates the device receives GPS satellites signal only and GN indicates the position is calculated with BEIDOU satellite signal)
UTC Time	060406.000		hhmmss.sss
Status	A		A=data valid or V=data not valid
Latitude	2503.7148		ddmm.mmmm
N/S Indicator	N		N=north or S=south
Longitude	12138.7451		dddmm.mmmm
E/W Indicator	E		E=east or W=west
Speed over ground	0.01	knots	True
Course over ground	0.00	degrees	
Date	180313		ddmmyy
Magnetic variation		degrees	
Variation sense			E=east or W=west (Not shown)
Mode	D		A=autonomous, D=DGPS, E=DR, N=Data not valid,R=Coarse Position, S=Simulator
Checksum	*78		
<CR> <LF>			End of message termination

VTG---Course Over Ground and Ground Speed

Table 4.10 contains the values for the following example:

$GPVTG,0.00,T,,M,0.01,N,0.02,K,D*3B

Table 4.10 VTG Data Format

Name	Example	Units	Description
Message ID	$GPVTG		VTG protocol header
Course over ground	0.00	degrees	Measured heading
Reference	T		True
Course over ground		degrees	Measured heading
Reference	M		Magnetic
Speed over ground	0.01	knots	Measured speed
Units	N		Knots
Speed over ground	0.02	km/hr	Measured speed
Units	K		Kilometer per hour
Mode	D		A=autonomous, D=DGPS, E=DR, N=Data not valid,R=Coarse Position, S=Simulator
Checksum	*3B		
<CR> <LF>			End of message termination